SunLED
www.SunLED.com

Part Number: **XYG1SUR18D**

2x5mm RIGHT ANGLE LED INDICATOR

Features

- PRE-TRIMMED LEADS FOR PC MOUNTING.
- I.C. COMPATIBLE.
- BLACK CASE ENHANCES CONTRAST RATIO.
- WIDE VIEWING ANGLE.
- HIGH RELIABILITY LIFE MEASURED IN YEARS.
- UL RATING : 94V-0.
- HOUSING MATERIAL: TYPE 66 NYLON.

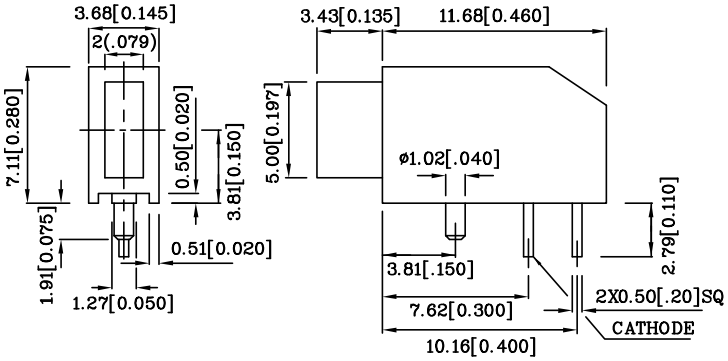

Notes:

1. All dimensions are in millimeters (inches).
2. Tolerance is ± 0.25(0.01") unless otherwise noted.

Absolute maximum ratings (T_A=25°C)		**UR (GaAsP/GaP)**	**Unit**
Reverse voltage	V_R	5	V
Forward current	I_F	30	mA
Forward current (peak) 1/10Duty cycle 0.1ms pulse width	i_{FS}	160	mA
Power dissipation	P_T	105	mW
Operating temperature	T_A	-40 ~ +85	°C
Storage temperature	Tstg	-40 ~ +85	
Lead solder temperature [2mm below package base]	260°C For 5 Seconds		

Operating Characteristics (TA=25°C)		**UR (GaAsP/ GaP)**	**Unit**
Forward voltage (typ.) (IF=10mA)	VF	1.9	V
Forward voltage (max.) (IF=10mA)	VF	2.5	V
Reverse current (VR=5V)	IR	10	uA
Wavelength at peak emission (IF=10mA)	λ peak	627	nm
Wavelength at Dominate emission (IF=10mA)	λ D	625	nm
Spectral Line half-width (IF=10mA)	Δλ	45	nm
Capacitance (VF=0V, f=1MHz)	C	15	pF

Part Number	Emitting Color	Emitting Material	Lens-color	Luminous Intensity (IF=10mA) mcd		Wavelength nm λ P	Viewing Angle 2 θ 1/2
				min.	typ.		
XYG1SUR18D	Red	GaAsP/GaP	Red Diffused	3	4.5	627	110°

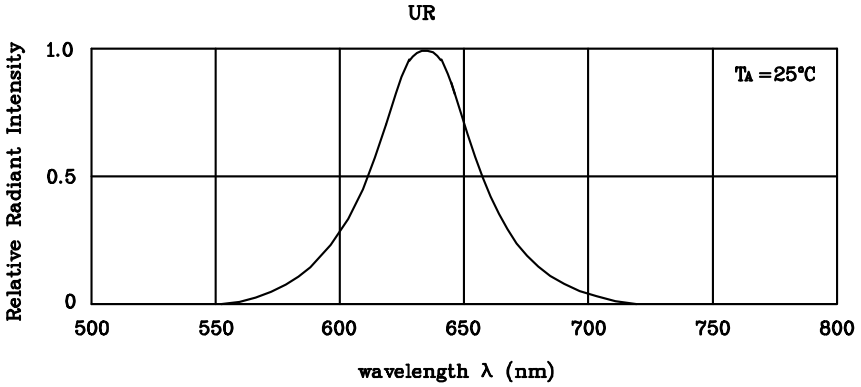

RELATIVE INTENSITY Vs. WAVELENGTH

❖ **UR**

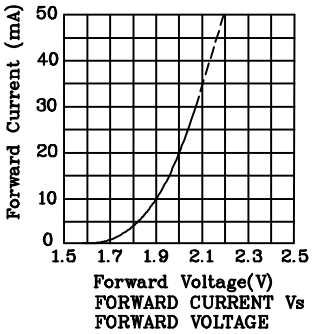

FORWARD CURRENT Vs
FORWARD VOLTAGE

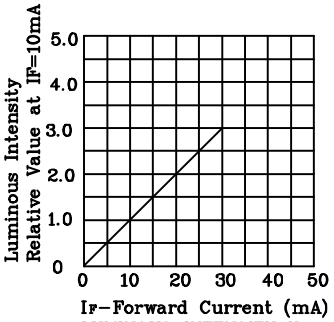

LUMINOUS INTENSITY Vs.
FORWARD CURRENT

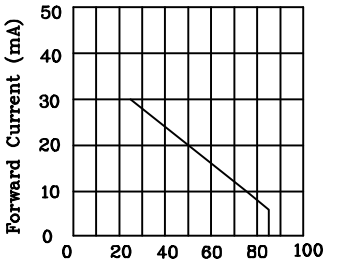

FORWARD CURRENT
DERATING CURVE

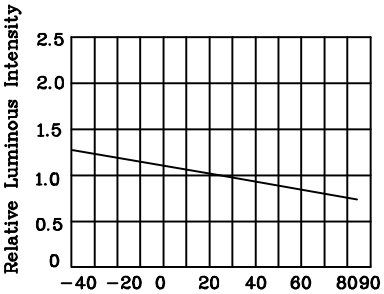

LUMINOUS INTENSITY Vs.
AMBIENT TEMPERATURE

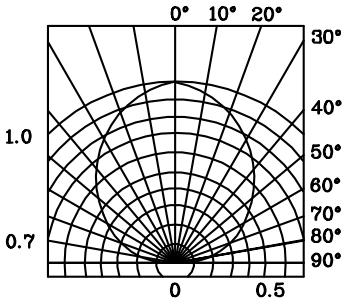

SPATIAL DISTRIBUTION